CDC trigger

Jae-Bak Kim*, E. Won, K. Kim, H. Moon, Y. Iwasaki, J. Shiu, C. Wang, M. Chang, S. Liu, Y. Teng, Y. Lai, K. Chen, Z. Chen, H. Huang, C. Hsu, H. Nakazawa, S. Neuhaus, S. Skambraks, S.Baehr [KU, KEK, NTU, NUU, FCU, NCU, TUM, KIT]

Elementary Particle Physics Laboratory
Korea University

2016 September 5th

2016 Trigger/Daq Workshop

Contents

- Introduction to the CDC trigger modules
- Connections between the modules
- Connections to GRL and DAQ

Introduction to the CDC trigger modules

- Front-end board
- Merger board
- Track Segment Finder (TSF) [UT3 board]
- Finder2D [UT3 board]
- Event Time Finder (ETF) [UT3 board]
- Tracker3D [UT3 board]
- Neural-Network z trigger [UT3 board]

Front-end board/ Merger board

- Front-end board is connected directly to CDC.
  - Sends the wire hit and TDC information to the CDC trigger.
  - Firmware developed by Uchida-san, Iwasaki-san, YunTsung (NTU).
- Merger board: Collects, merges and reformats the data from front-end boards.
  - Developed by NTU.

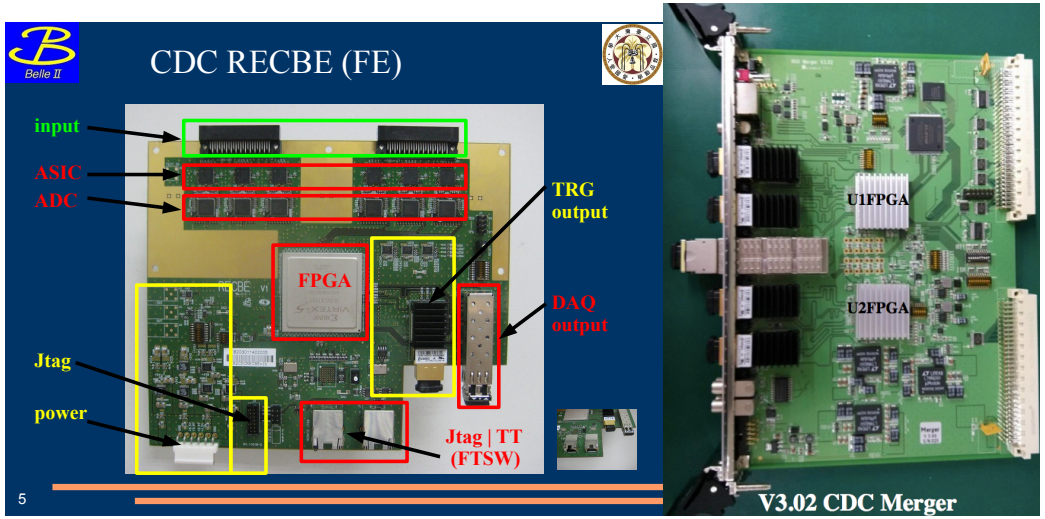

Left: CDC front-end. Right: Merger board.

TSF (Track segment finder)

- Finds segments of tracks using hit patterns.
- Solves "left right ambiguity problem"
- Reduces CDC background for downstream of CDC trigger
- Developed by KyungTae (KU)

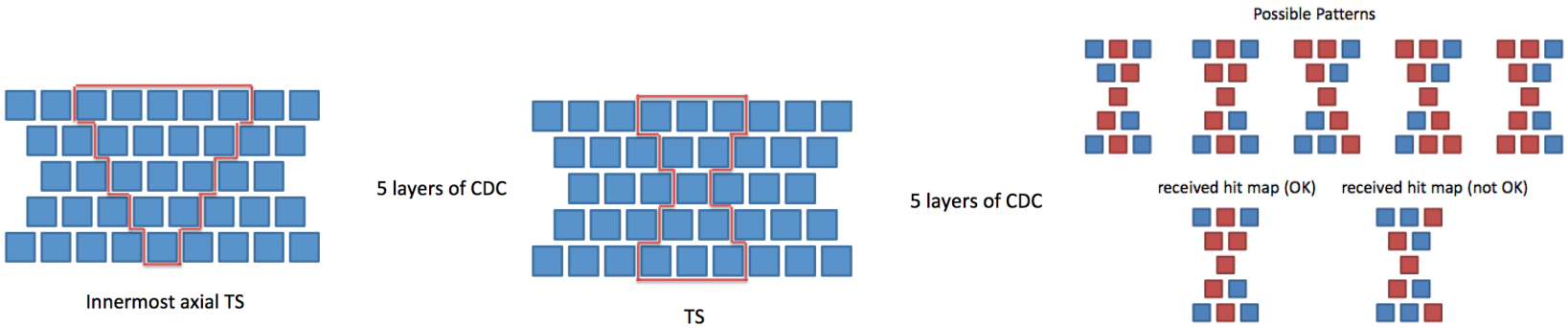

Left: TS for SL 0. Middle: TS for rest SLs. Right: Example of TS patterns

Finder2D

- Finds tracks using Hough transformation and voting.
- A new Hough transformation was developed recently which improves performance. (Sara)
- Developed by FCU, Tsu-an (NTU), and Sara (TUM).

New representation for 2D finder

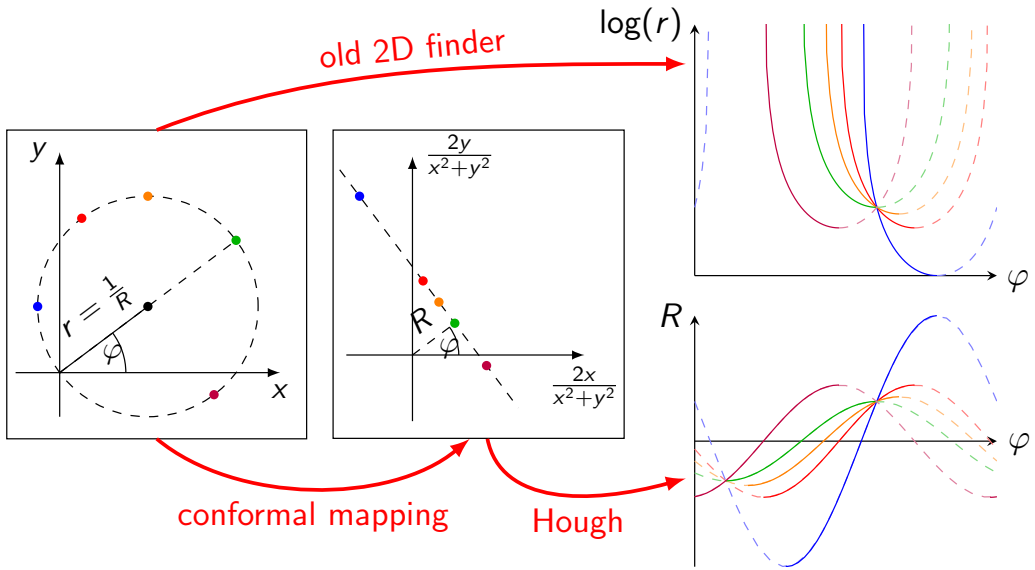

- same Hough plane for charge plus and charge minus
- no double counting for high p_T

ETF (Event time finder)

- Finds time when the event starts.
- Collects fastest timing of all TS (Track segments)
- Finds event time when number of timing is above a threshold.
- Developed by HyunKi (KU)

Event Time

- Fastest time distribution for single track.

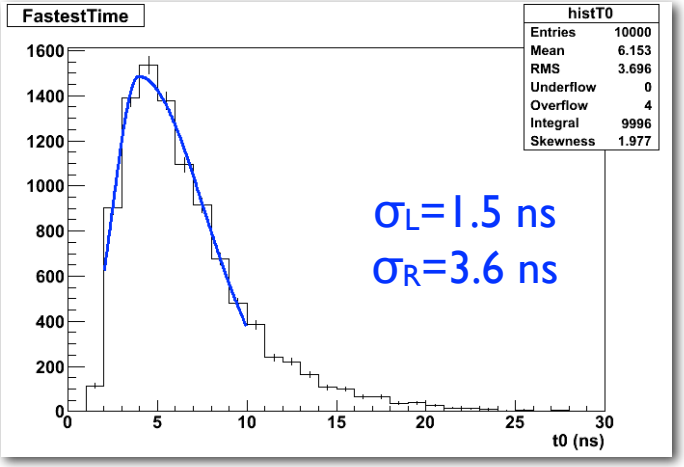

Kyungtae Kim,Korea Univ. 11 12th B2GM

Tracker3D/Neural Network z trigger

- Tracker3D: Finds and fits the track to get track parameters $(p_T, \phi_0, z_0, \lambda)$
  - Fitter2D (Developed by FJU and Tsu-an (NTU))
  - Finder3D, Fitter3D (Developed by Jaebak (KU))
- Neural Network z trigger
  - Uses a neural network to estimate the z-vertex.
  - Developed by TUM, KIT

Logical connection between modules

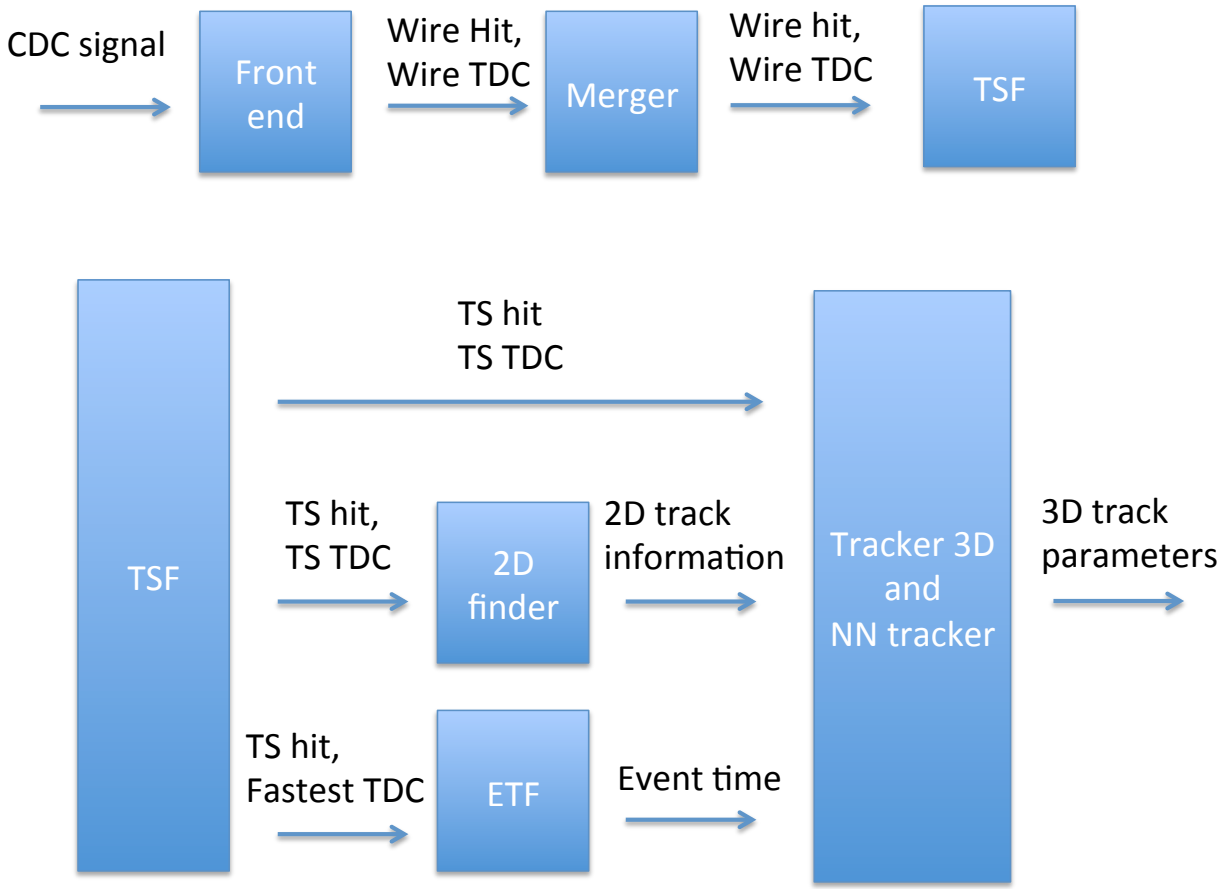

Optical link connections between boards

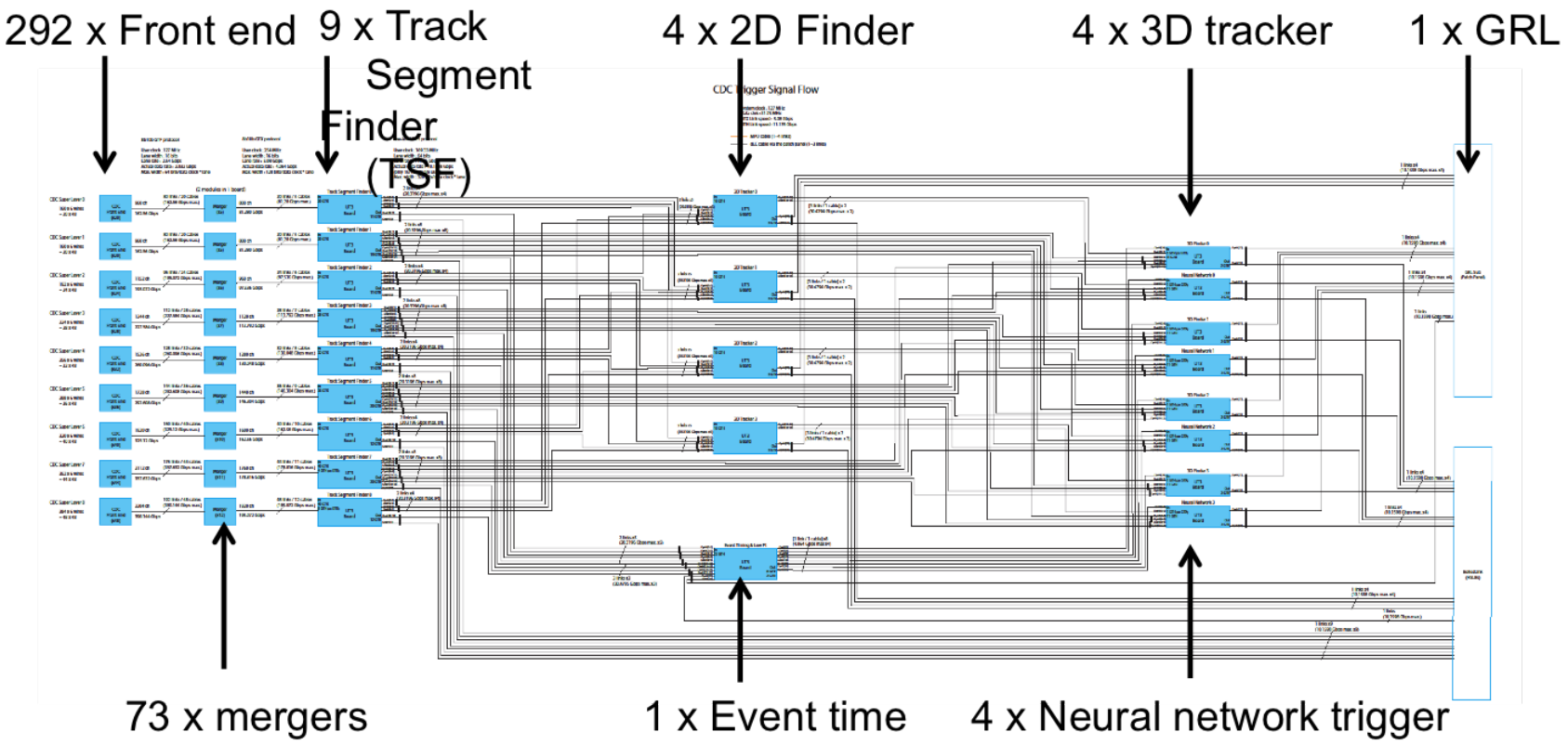

- Optical link firmware developed by YunTsung (NTU)

Connections to GRL and DAQ

- The CDC trigger is connected to GRL trigger by optical link.
  - Sends tracks parameters $(p_T, \phi_0, z_0, \lambda)$ to the GRL trigger.
- The CDC trigger will send trigger data to DAQ using Belle2Link
  - Data be used to monitor the CDC trigger.
  - Data be used to debug the CDC trigger modules.
  - Belle2Link firmware developed by Nakazawa-san

Summary

- Modules of the CDC trigger was introduced.
- More specifics and status of the modules will be shown by others.

Backup